产品介绍
INTRODUCTION

YS62Q1BR-⋆A

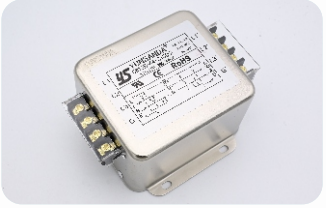
CW12B-⋆A-S(005)

CW12B-⋆A-R

CW12B-⋆A-S

- 三相交流电源滤波器
  Three-phase AC filters
- 含共模线圈
  With common mode coil
- 多种出线方式可供选择
  Multiple connection to choose from
- 多种安装方式可供选择
  Multiple installation methods to choose from

产品特点
FEATURE

- YS62Q1BR-⋆A 底部导轨固定端子排出线滤波器 Terminal block connection filter by bottom guide rail fixed
- CW12B-⋆A-R 侧面导轨固定端子排出线滤波器 Terminal block connection filter by side guide rail fixed
- CW12B-⋆A-S(005) 螺丝固定端子排出线滤波器 Terminal block connection filter by screw fixed
- CW12B-⋆A-S 螺丝固定螺栓出线滤波器 Screw bolt connection filter by screw fixed

应用范围
APPLICATION

- 电子电气设备 Electrical and Electronic Equipment
- 医疗设备 Medical Equipment
- 办公自动化设备 Office Automation Equipment
- 消费电子 Consumer Electronic Production
- 数据通讯设备 Data Communication
- 变频器 Frequency converter
- 机械设备 Mechanical equipment
- 三相工业设备 Three-phase industrial euipment
- 各类电力设备 Power equipment of all kinds

技术参数
TECHNICAL DATA

- 额定电压 / Rated Voltage : 115/250/380/440V AC
- 工作频率 / Working Frequency : 50/60Hz
- 额定电流 / Rated Current : 1-60A
- 气候类型 / Climatic Category : 25/85/21
- 测试电压 / Working Frequency : 1500V DC(Line to Line) 2000V AC(Line to Ground)

产品列表
LIST

产品型号 Part No.	额定电流(A) Rate Current	泄露电流(mA) Leakage Current @250VAC 50Hz	电路图 Schematics	外形尺寸 Dimension	出线方式 Connection	安装方式 Installation	重量(g) Weigh	安规认证 Certification
CW12B-⋆A-S	3~60	<2.1	B10	A21		螺丝 Screw	879	CE RoHS CQC UL
CW12B-⋆A-S(005)	3/6/10/20/30/40	<2.1	B10	A23		螺丝 Screw	827	CE RoHS CQC UL
CW12B-⋆A-R	3/6/10/20/30/40	<2.1	B10	A24		导轨 Rail	830	CE RoHS CQC UL
YS62Q1BR-⋆A	3/6/10/20/30	<0.6	B10	A46		导轨 Rail	342	RoHS CE

外形尺寸(mm)
DIMENSION

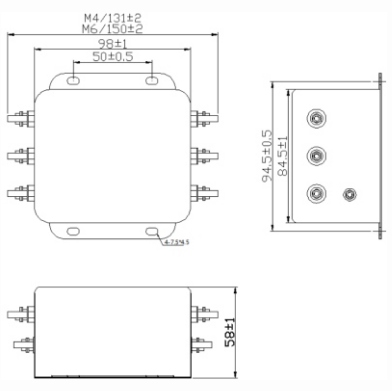

A21

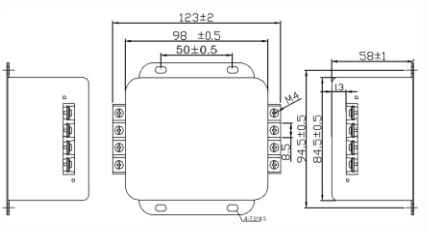

A23

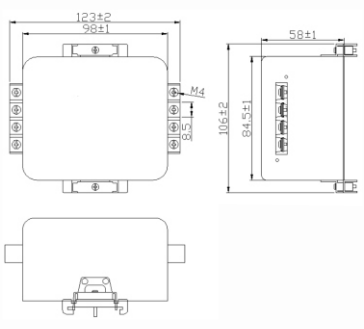

A24

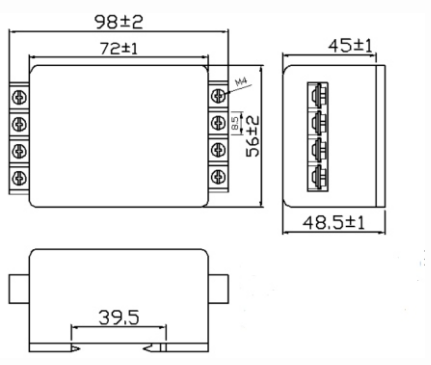

A46

电路图
SCHEMATICS

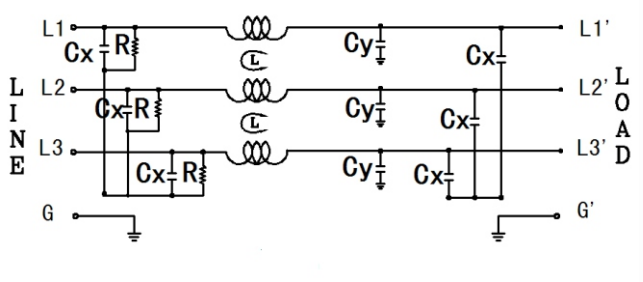

B10